LIB

Reg. No. | | | | | | | | | | |

[17ME41]

# FOURTH SEMESTER B.TECH EXAMINATION, JUNE – 2019

## MECHANISMS AND MACHINES

**Time: 3 Hours** **Maximum Marks:70**

**Instructions:**

1. Answer any **FIVE** full Questions by choosing at least TWO questions from each part.
2. Missing data may be suitably assumed.

### PART - A

1. a. Define kinematic link. Briefly explain different types of links with two examples in each case. **07**

   b. With neat sketch, explain the elliptical trammel mechanism. **07**

2. a. With neat sketch, explain Peaucellier exact straight line motion mechanism. **07**

   b. With neat sketch, explain Geneva wheel mechanism. **07**

3. A cam is to give the following motion to a knife-edged follower: **14**

   a. Outstroke during 60° of cam rotation;

   b. Dwell for the next 30° of cam rotation;

   c. Return stroke during next 60° of cam rotation and

   d. Dwell for the remaining 210° of cam rotation.

   The stroke of the follower is 40mm and the minimum radius of the cam is 50mm. The follower moves with uniform velocity during both the outstroke and return strokes. Draw the profile of the cam when axis of the follower is offset by 20mm from the axis of cam shaft.

4. a. Define the following **06**

   i. Module

   ii. Profile

   iii. Fillet radius

   b. A pair of spur gears has 16 teeth and 18 teeth, a module 12.5mm, addendum 12.5mm and pressure angle 14.5°. Prove that the gears have interference. Determine the minimum number of teeth and the velocity ratio to avoid interference. **08**

### PART - B

5. The fig.5 shows a four bar mechanism. Draw the free body diagrams and determine the various forces on the links for the equilibrium of the system. Also calculate the torque $T_2$, AB= 200mm; BC= 370mm; CD = 250mm; AD = 215mm; CE = 100mm; $\angle DAB = 110^0$. **14**

JAIN (Deemed-to-be University) Learning Resource Centre Jain Global Campus Ramanagar-112

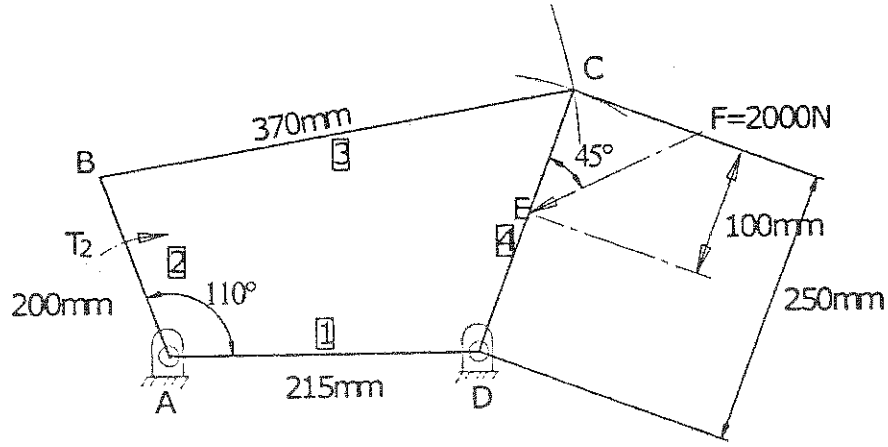


**Fig. 5**

6. a. Derive an expression for maximum fluctuation of energy of a flywheel. **04**

b. A single cylinder, single acting four stroke gas engine develops 18.4kW at 300rpm with workdone by the gases during the expansion stroke being 3 times the workdone on the gases during compression stroke. The work done during suction and exhaust is negligible and the total fluctuation is $\pm 2\%$ of mean. The turning moment diagram during expansion is assumed to be triangular in shape. Find the moment of inertia of the flywheel. **10**

7. A shaft carries four masses A, B, C and D of magnitude 200kg, 300kg, 400kg, 200kg respectively and revolving at radii 80mm, 70mm, 60mm and 80mm in planes measured from A at 300mm, 400mm, 700mm. The angles between the cranks measured anticlockwise are A to B 45°, B to C 70° and C to D 120°. The balancing masses are to be placed in planes X and Y. The distance between the planes A and X is 100mm, between the planes X and Y is 400mm and between the planes Y and D is 200mm, If the balancing masses revolve at a radius of 100mm, find their magnitude and angular positions. **14**

8. a. Show that for a circular disk, $C = I.\omega.\omega_p$ where, **07**

C=Applied couple, I=Moment of Inertia, $\omega$= Angular velocity of disk,

$\omega_p$=Precession velocity

b. An aeroplane makes a complete half circle of 50m radius towards left when flying at 200km/hr. The rotary engine and the propeller of the plane has a mass of 400kg having a radius of gyration of 0.3m. The engine rotates at 2400rpm clockwise when viewed from the rear. Find the gyroscopic couple on the air craft and state its effect on it. What will be the effect if the aeroplane turns to its right instead of its left? **07**